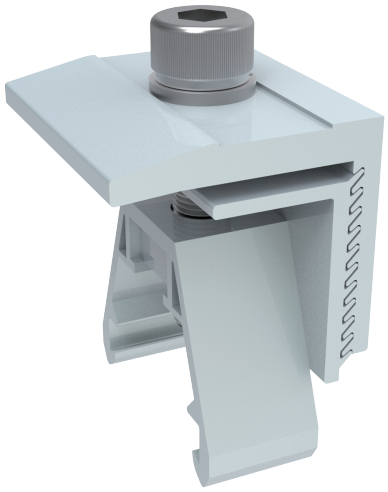

Adjustable End Clamp

CHIKO end clamps is designed base on 5 rail to fix module on the end of rail, 30mm to 45mm thickness module are available.

PRODUCT LINE

Item	Product Name
CK-FTE-T30-45	CHIKO Fix End Clamp 30-45mm

TECHNICAL DATA

Main Material	AL 6005-T5
Tighten torque	15N.m
Safe torque	20N.m

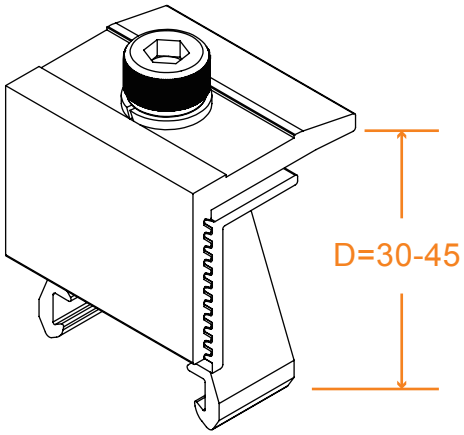

ADVANTAGES

- Easy installation
- High class anodized
- Clamp nut

WARRANTY

COMPONENT LIST

MATERIAL	QTY
End Clamp	01
Alu Clamp	01
SUS304 Bolt M8*35	01
SUS304 Spring Washer M8	01
SUS304 Nut M8	01

ORDERING SPECIFICS

Standard Packaging	80 PCS/BOX 320PCS/CTN
Dimensions	51X38X22CM
Weight	30.5KG